Advance of the design and technology of birefringent filters

V.I. Skomorovsky

Institute of Solar-Terrestrial Physics,
664033 Irkutsk, P.O.Box 4026, Russia

June 15, 1994

ABSTRACT

Practical aspects of constructing very wide-field of view elements of Lyot Birefringence Filters (LBF) using the new TeO_2 and $PbMoO_4$ crystals are discussed. The field of view exceeds that of the Halle and Zeiss LBF designs that use wide field elements based on half-wave plates. The combination of the new crystals between themselves and with calcite provides a possibility of constructing wide angle Solc filters covering a rather large spectral range. Because of the required tight tolerances on the parameters of the wave plates new methods and an optical system have been developed to orientate a crystallographic axis in the elements and control the thickness and parallelism of the element surfaces during finishing. The optical system set up on a polishing machine and the mirror installed under the polishing tool allow direct interferometric measurement of retardation and parallelism of the crystal plate during the polishing process. Details of these methods and the optical conoscope are discussed. Examples of the performance of the new wide-field elements are presented.

Keywords: polarization, polarimetry, birefringent filter, crystal optics, optical technology

1 INTRODUCTION

The possibilities of classical birefringent filters due to Lyot[1], Ohman[2], Evans[3] and Solc[4] fall far short of being exhausted. Theoretically, it is possible to design super-narrow band, contrast and wide field-of-view filters[5], but manufacturing them in practice is limited by the number of suitable crystals and technological difficulties of handling crystals.

B.Lyot[1] suggested several versions of birefringent elements with an increased field of view. In one of them, the element is divided into two halves, in between which the half-wave plate is inserted. All existing filters contain elements of this type. For elements made from the most popular crystal, optical calcite, this gives an about 4.4-fold increase in the field of view. The spectral range of operation of the wide field-of-view elements is limited by chromatism of half-wave plates. A wide field of view in a wide spectral range can be obtained in other types of wide field-of-view elements that contain crystals of opposite sign. However, such elements have not yet been implemented in optical instruments because of the unavailability of optically homogeneous, large-size crystals with birefringence close to that of optical calcite. As will be shown in this paper, the advent of new artificial paratellurite (TeO_2) and lead molybdate ($PbMoO_4$) crystals with high birefringence offers a possibility

of manufacturing elements with a wide field of view and constructing birefringent filters with extreme optical characteristics.

It is difficult to manufacture elements of Lyot filters and, especially, Solc filters from crystals with high birefringence because of tight tolerances for finishing and orientation[6]. Finishing of crystal plates consists of two processes: polishing and optical control which (as we are aware of) have been and are performed separately to date. During polishing the plate thickness is adjusted. Temperature gradients that arise when polishing an anisotropic crystal, give rise to the astigmatic treatment of the surface. Sometimes it is very difficult to obtain a uniform thickness of the entire plate with the required tolerance[7]. The optical thickness and plane-parallelism are usually checked when the polishing process is suspended. The plate is placed in a thermostat, and the position of transmission maxima of the channel spectrum is controlled at the filter's operating temperature at the spectrograph, or it is placed in a Senarmon compensator where the optical thickness is controlled relative to the reference plate. Testing can show that to achieve the required optical thickness, it is necessary to make several polishing motions. The plate is again placed on the polishing machine. Despite the temperature adjustment, small difference in temperature of the plate and the polisher at the beginning of the polishing process leads to surface distortions which subsequently cannot be eliminated because of thickness limitations.

We determined crystal working regimes on a machine where no astigmatic surface bending arises and a high surface quality is ensured. A device was also developed for checking the thickness and plane-parallelism directly during polishing. Polishing and checking of crystal plates are integrated into a single technological process. Using this process it was possible to manufacture birefringent filters tuned to the solar corona line 6374$\AA$ with 0.5$\AA$ bandwidth and a tunable filter for two pass band the BaII 4554$\AA$ line and the Hβ line with 0.08$\AA$ and 0.09$\AA$ bandwidth, respectively[8].

This paper gives also a description of a simple instrument, namely the conoscope for checking the orientation of the parallel surfaces of plates in the principal directions of the crystal. In regard to the accuracy of checking, the instrument can be used instead of the X-ray goniometer. It is very convenient in operation in the laboratory.

2 WIDE FIELD-OF-VIEW ELEMENTS

In birefringent filters, the light propagates perpendicularly to the optical axis of crystal elements. In this direction, the conoscopic pattern of a simple element is a family of hyperbolas. The field of view of the plate is inscribed between the vertexes of the hyperbolas. It is usually assumed that the displacement of a transmission maximum of the channel spectrum of the polarizer- plate-polarizer system for tilted beams of about 0.1 of the maximum half-width may be tolerated. In this case the plate's field of view, of optical calcite, for example, of 14.6mm thickness makes up 38 arc min. If the light beam is incident on the crystal obliquely in the optical axis plane and in the perpendicular plane, birefringence, respectively, decreases and increases. Lyot suggested that wide field-of-view elements should be designed by using crystals of different signs. Thicknesses of the components are chosen such that the wide field-of-view element had a circular field of view. In principle, out of two crystals of the same thickness, for which $n_{o1} = n_{e2}$ and $n_{e1} = n_{o2}$, it is possible to assemble elements with a very wide field of view.

Table 1 presents data on crystals of paratellurite, lead molybdate and natural optical calcite. Refractive indices of paratellurite and calcite and the channel spectrum pass band shift for all crystals were measured in the ISTP optics laboratory. Refractive indices of lead molybdate are taken from a table in a handbook[9]. These artificial crystals have a high optical homogeneity and work readily. They can be used to manufacture birefringent elements over 40mm in diameter. With the crystal thickness ratio 1:2.23 for the calcite-paratellurite system and with the ratio 1:1.19 for the paratellurite-lead molybdate, the field of view becomes circular in the red region of the spectrum. Fig. 1 presents conoscopic pattern for the above-mentioned systems and conoscopic patterns from optical calcite of the approximately same order of interference. The field of view of the calcite-paratellurite system increases 11 times, and that of the paratellurite-lead molybdate system increases 30 times. Compared to

Table 1:

Crystal	Wave length Å	n_o	n_e	μ	Pass band shift, Å/°C
Paratel-lurite	4861	2.33010	2.49605	0.16555	0.08
	6173	2.26347	2.41721	0.15737	0.16
	6328	2.25825	2.41103	0.15278	0.18
	6563	2.25117	2.40325	0.15208	0.48
Lead molyb-date	4861	2.5043	2.3355	0.1688	0.41
	6328	2.386	2.262	0.124	
	6563	2.3758	2.2547	0.1211	0.70
Optical calcite	4861	1.66785	1.49074	0.17711	0.26
	6173	1.65662	1.48565	0.17097	0.34
	6328	1.66571	1.48520	0.17051	0.35
	6563	1.65437	1.48459	0.16978	0.36

a wide field-of-view element with a half-wave plate, the advantage is 3-to-1 and 7-to-1, respectively. In the blue spectral region where the corresponding refractive indices are close in magnitude, the field of second system is 90 times larger than the field of a element of calcite. On the basis of these systems there is a realistic possibility of constructing multibandpass, wide field-of-view, birefringent Solc filters for the visible and infrared spectral ranges. To reduce Fresnel reflection, elements should be placed in an immersion, and anti-reflection coatings should be deposit on the crystal surfaces.

3 FINISHING OF CRYSTAL PLATES OF BIREFRINGENT FILTERS

The main factor that leads to an astigmatic treatment of plates, is the anisotropy of the coefficient of thermal expansion. Only the elimination, within the required limits, of the temperature gradient between the upper, dry and the lower, being polished, wet surfaces will remove the astigmatic bending of the component when treated in the separator. Using thermistors placed in the surfaces, we investigated the appearance and influence of temperature gradients upon the polishing process. When treating a plane-parallel plate of optical calcite of 10mm thickness and 43mm in diameter, astigmatic distortions of the surface were found to be about 0.1λ, with the temperature difference of the lower and upper surfaces below 0.1°C.

Figs. 2 and 3 present a schematic and a photograph of the device for finishing of plates of birefringent filters. The device includes a polisher with teeth on which abrasive grains within a thin layer of polishing pitch are secured. The polisher has the edge to hold the transparent heat-removal liquid that fills the spaces between the teeth, and a groove to collect the slurry. The polisher includes a built-in mirror. Part of the teeth in the polisher pass through the holes in the mirror. These teeth have a common flatness with the other teeth of the polisher. On the polisher is the separator. The carrier of the machine makes the separator displace and controls the pressure onto the polisher. The adjusted crystal plates and the reference birefringent plate are placed in the holes of the separator. The reference plate is installed on a thin transparent non crystal substrate which protects it against polishing. The substrate allows the reference plate to take the same temperature as do the adjusted plates. It does not obstruct birefringence measurements.

Over the polisher is an optical monitoring device. The mirror of the polisher and the holes of the separator, while displacing, can be positioned on the optical axis of the monitoring device. The device includes a point source

of polarized monochromatic light, namely a laser with a microobjective lens, a beam splitter, an auto-collimation objective lens, and a Senarmon compensator (a quarter-wave plate with a polarizer). The system can further incorporate an eye-piece, a crystal wedge, and a lens. The device is designed for measuring the optical thickness of crystal plates in birefringence (and the uniform thickness in the field of the plates), either with the Senarmon compensator or with a crystal wedge, as well as for measuring plane-parallelism in n_o and n_e -beams. Plates are checked during a short-duration stop of the polishing process.

Fig. 4 shows the scheme for controlling the optical thickness. The light from the collimator in the form of a parallel beam passes through the crystal plate being monitored, is reflected by the mirror, passes again through the plate and from the beam splitter enters the Senarmon compensator. Based on the difference in angles of orientation of the analyzer to "darkness" for the reference and the adjusted plates that are exposed to the same temperature, one judges the need for subsequent polishing of the adjusted plate. The difference of angles is calculated beforehand for the adjusted plate of any thickness. If the plates include local optical inhomogeneities, then the position of "darkness" on the Senarmon compensator is determined with low confidence. In this case checking should be carried out with a crystal wedge which is introduced ahead of the objective lens. The wedge, at a combined action with the plate, produces two or three interference fringes of equal thickness (Fig. 4), whose position depends on the thickness of the plate being processed. The thickness is monitored from the relative position of the fringes on the adjusted and the reference plates.

Plane parallelism of the components in n_o and n_e -beams is monitored with this same auto-collimation device from interference fringes of equal inclination. The eye-piece and the additional lens are introduced into the system, and the wedge is withdrawn (Fig. 5). The plate is put under into the device with any position of the polisher, and no mirror is necessitated for the monitoring. Light beams that are reflected from the lower and upper surfaces, interfere and produce, in the effective focal plane of the device, interference fringes which are observed through the eye-piece. The wedge of the plate is measured in the direction of largest expansion of the fringes when the plate is displaced and it is adjusted in the polishing process.

4 THE CONOSCOPE

Figs. 6 and 7 are the optical scheme and a photograph of the conoscope, respectively. In Fig. 6 the plane polarized light comes from the laser at the left. Lens produces a point source a on the surface of the semitransparent mirror which is positioned at the collimator's focus. For the orientation, the crystal plate is placed on the stage's base glass plate. The stage has a mechanical mount, thus allowing the crystal plate to rotate about the vertical axis and tilt about the horizontal axis, normal to the drawing plane. The parallel light beam passes through the quarter-wave plate 2 and the polarizer which form the Senarmon compensator. Using the compensator it is possible to measure the phase shift in crystal plates. Lens in its focal plane constructs image A of the point source. One surface of the base plate has fine grinding. Part of the parallel beam is scattered and forms an extended light source to provide a conoscopic pattern of the crystal plate. The interference conoscopic pattern is constructed in the focal plane of lens and is observed together with the image of the point A through eye-piece . Part of the conoscopic pattern is shown in the drawing plane.

The conoscope (Fig. 7) includes two turrets with an assembly of lenses and eye-pieces. They make it possible to choose the best pair for optimum magnification and the field of view of the conoscopic pattern when crystal plates of different orders of interference are measured. The conoscope's base stage rotates about the vertical axis on a precision ball bearing. The tilt of the stage about the horizontal axis within $0 \pm 30°$ is effected by means of a hand wheel with a worm mechanism. A lever that is rigidly fastened to the stage, is tilted together with the stage. On the lever is installed an the magnified lens with a vernier to measure the tilt angle of the stage.

By tilting the mirror (Fig. 6), the point A can be installed onto one of the isochromatic fringes. The position of isochromatic fringes does not depend on the mirror tilt. If the surfaces of crystal plates are not parallel with the main directions in the crystal, then, with the stage rotating, the conoscopic pattern shows a beating with

respect to the point. A bright point appears now on the one side, now on the other side of isochromatic fringe and extinguishes when it finds itself on its center. The instrument does not require any hair cross, and monitoring is very convenient and is independent of optics adjustment.

Sometimes one has to make sure that there is no wobble of the scattering base surface of the plate. The mounting of the base plate parallel with the rotation plane of the ball bearing is monitored from the beating of the auto-collimation point a' reflected from the parallel, non scattering surface of the plate. In Fig. 6 the beams that are incident from source a onto the base plate are shown as solid lines, and those reflected from the plate are shown as dashed lines. The semitransparent mirror reflects the auto- collimation point a', and its image A' is constructed in the focal plane of the collimator. By rotating the stage, the operator observes the beating of the A' image relative to the A image, and if there is some beating, he can correct the base plate position by means of adjusting screws.

The position of the crystallographic axis in the birefringent plate relative to its surfaces is measured as follows. The initial, zero, position of the crystal plate is determined. For this purpose, by tilting the stage about the horizontal axis, it is necessary to make points A and A' match. However, the brightnesses of images A and A' differ quite considerably, and this hampers their matching. In order to adjust the brightnesses, quarter-wave plate 1 is introduced. The beam to A' passes three times, accumulating the path-length difference of 3/4 of wavelengths. By rotating the polarizer, the brightnesses of A and A' change opposite in phase and are equalized. To measure the orientation of the crystal axis with respect to the surfaces of the plate, the difference in tilt angles of the stage is measured, with the point A directed to the identical isochromatic fringes (rings, hyperbolas) on both sides of the zero position. The axis position angle and the amount of the required processing of the plate are determined from nomographs[10]. The nomographs have been constructed using the formula deduced for calculating the path-length difference of the ordinary and extra- ordinary rays for a beam incident at an arbitrary angle onto the surface of the plane-parallel plate in the case of an arbitrary position of the crystallographic axis relative to the surfaces of the plates. Isochromatic fringes at the edge of the field are best suited for measurements and calculations of the optical axis position. Crystal plates orientation becomes faster when the process uses measurements of the axis position angle and observations of the beating of the conoscopic picture. The accuracy of orientation is about one minute of arc.

5 CONCLUSIONS

Monitoring devices and the technological process of precision finishing of crystal plates are used to process crystals with high birefringence. Tight tolerances for finishing in regard to birefringence are maintained when machining wave plates of 1.1-40mm thickness and from 30 to 45mm in diameter. In the optics laboratory of the Institute of Solar-Terrestrial Physics SD RAS, we have constructed plates of birefringent filters: for the Hα, KCaII and FeXI 6374$\AA$ lines with 0.5$\AA$ pass band half-width and a two-band tunable filter for the BaII 4554$\AA$ and Hβ lines with 0.08$\AA$ and 0.09$\AA$ half-widths, respectively.

6 ACKNOWLEDGMENTS

G.N. Domyshev and V.P. Sadokhin took part in designing of the monitoring devices and in adjustment work on the manufacturing process. Nomographs for calculating orientations of the optical axis in crystal plates for the conoscope and measurements of optico-physical characteristics of crystals were accomplished by G.I. Kushtal. I am grateful to N.A. Polyushkina for assistance with technical editing of the paper.

7 REFERENCES

[1] B. Lyot, "The birefringent filter and its applications in Solar Physics", Ann. Astrophys., Vol. 7, pp. 31-79, 1944.

[2] Y. Ohman, Nature, 141, pp. 157, 1938.

[3] J.W. Evans, "The birefringent filter", J. Opt. Soc., Vol. 39, pp. 229-242, 1949.

[4] I. Solc, "A new type of birefringent filter", Czech. J. Phys., Vol. 4, pp. 53-66, 1954.

[5] A. Title and W. Rosenberg, "Research on spectroscopic imaging", Vol. 1, Technical discussion Lockheed Missiles & Space Company, Inc., Sunnyvale, California, 1979.

[6] R.G. Giovanelli and J.T. Jefferies, "On the optical properties of components for birefringent filters", Aust. J. Phys., Vol. 7, pp. 254-267, 1954.

[7] R.N. Smartt, "The production of high-quality optical surfaces on calcite", J. Sci. Instrum., Vol. 38, pp. 165-172, 1961.

[8] S.V. Aleksandrovich, G.N. Domyshev, A.I. Korovkin, V.P. Sadokhin, and V.I. Skomorovsky, "A narrowband birefringent filter with two transmission bands", Novaya tekhnika v astronomii , Vol. 5, pp. 34-39, Nauka, Leningrad., 1975.

[9] A.A. Blistalov, V.S. Bondarenko, N.V. Perelomova, F.N. Strizhenova, V.V. Chkalova, and M.P. Shaskolskaya, "Acoustic Crystals", Handbook, edited by M.P. Shaskolskaya, Nauka, Moscow, 1982.

[10] G.I. Kushtal, N.P. Milovidova, and V.I. Skomorovsky, "Orientation of the birefringent filter's plates", Preprint, No. 11-88, SibIZMIR, Irkutsk, 1988.

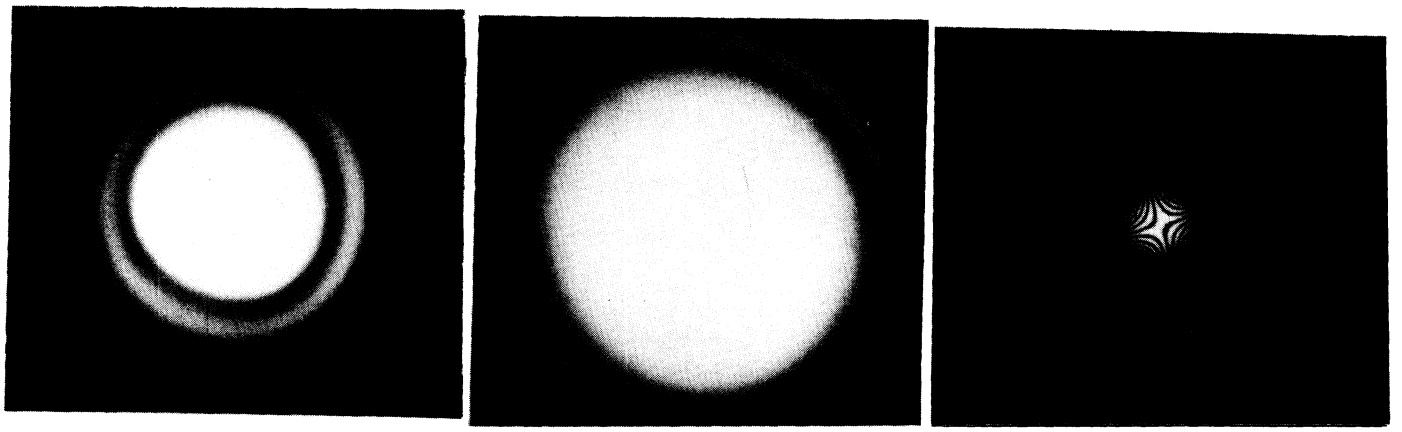

Figure 1: Conoscopic pattern of wide field-of-view composite elements:
a) paratellurite-calcite, interference order 4711 in λ 6328$\mathring{A}$. The first dark ring diameter is 19°;
b) paratellurite-lead molybdate, interf. order 3925;
c) conoscopic pattern calcite element interf. order 4041.

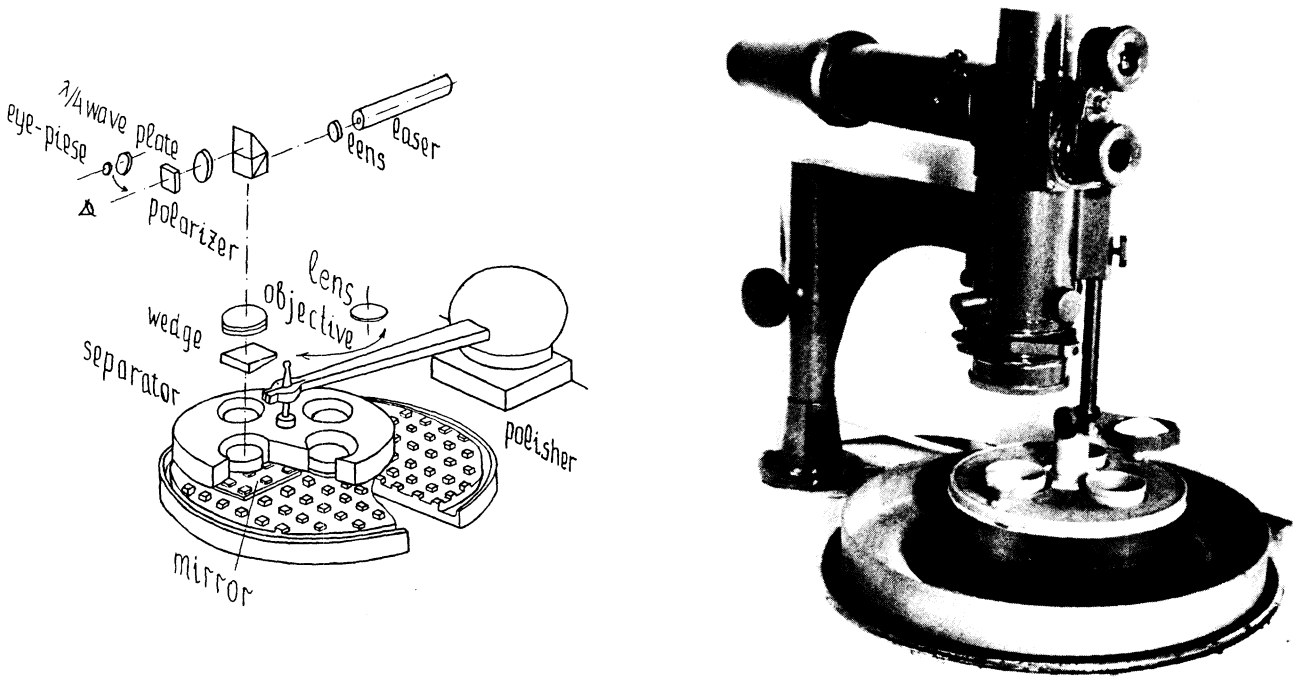

Figure 2: Optico-mechanical scheme of the device for finishing of crystal elements.

Figure 3: Device for finishing of crystals. The carrier of the machine is not shown. The crystal wedge is introduced into the position of thickness monitoring. The lens and the eye-piece are withdrawn. The separator is displaced in order to open the mirror installed inside of the polishing machine.

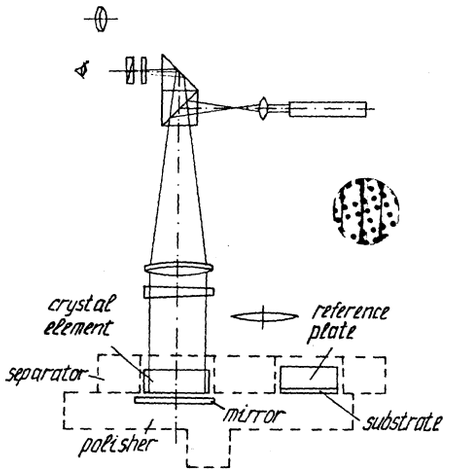

Figure 4: Schematic of thickness monitoring. Right - a photograph of the interference pattern when measurements are made with the wedge. Dark circles - holes in the mirror for polishing teeth.

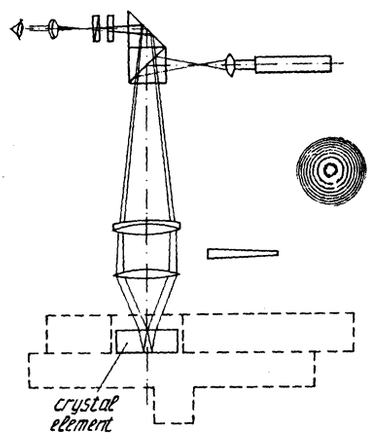

Figure 5: Schematic of plane-parallelism monitoring. Right - a photograph of the interference fringes of equal inclination.

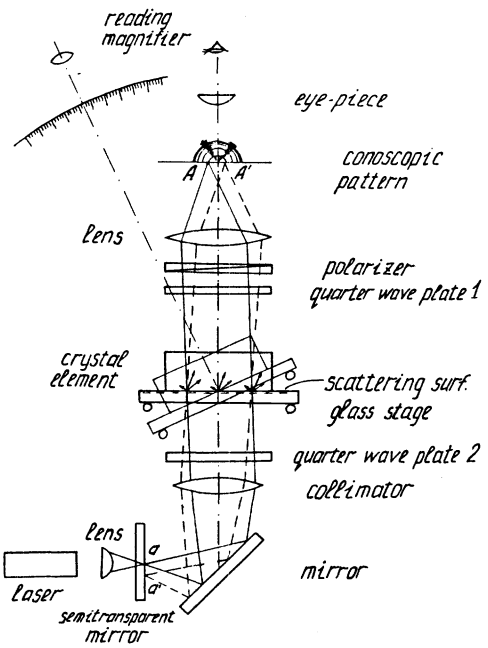

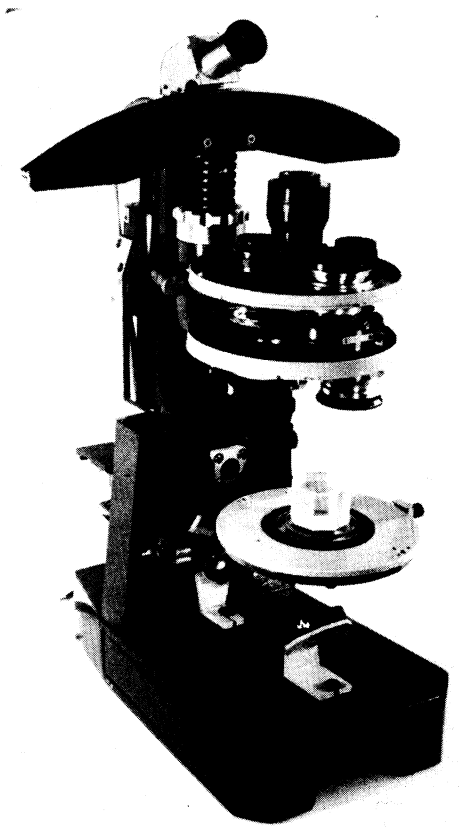

Figure 6: Optical system of the conoscope. Shown are two positions of the stage - normal and tilted about the horizontal axis. Together with the stage is rotated the lever with a reading magnifier, with which the tilt angle of the stage is measured when a bright point is directed to the isochromatic fringe.

Figure 7: Conoscope for orientation of crystals. The crystal plate is on the stage's base plate. The laser is installed in vertical position.